Risk Management

Dan O'Leary CBA, CQA, CQE, CRE, SSBB, CIRM
President
Ombu Enterprises, LLC
Dan@OmbuEnterprises.com
www.OmbuEnterprises.com

OMBU
ENTERPRISES, LLC

FDANEWS

©2018, Ombu Enterprises, LLC

Topics

- Standards
- The Risk Management Flow
- Hazard, Hazardous Situation, & Harm
- Understanding Frequency and Severity
- Estimating Risk and Residual Risk
- Setting Acceptability Criteria
- Production and Post-production Information
- Updating the Hazard Analysis
- Updating the Risk Management Process
- Questions

Standards

QMS & RMS Standards

The International Standards are:
QMS: ISO 13485:2016
RMS: ISO 14971:2007

	US	Canada	EU
QMS	21 CFR Part 820	CAN/CSA 13485-03	EN ISO 13485:2016
RMS	ISO 14971:2007 ANSI/AAMI/ISO 14971:2007	ISO 14971:2007 CAN/CSA-ISO 14971-07	EN ISO 14971:2012

The US and Canada recognize both the international and its national RMS standards

The EU harmonized its regional standards only.

EN ISO 13485:2016/AC:2018 was published on March 28, 2018

CEN/TR 17223:2018 was published on March 21, 2018

QMS Standards

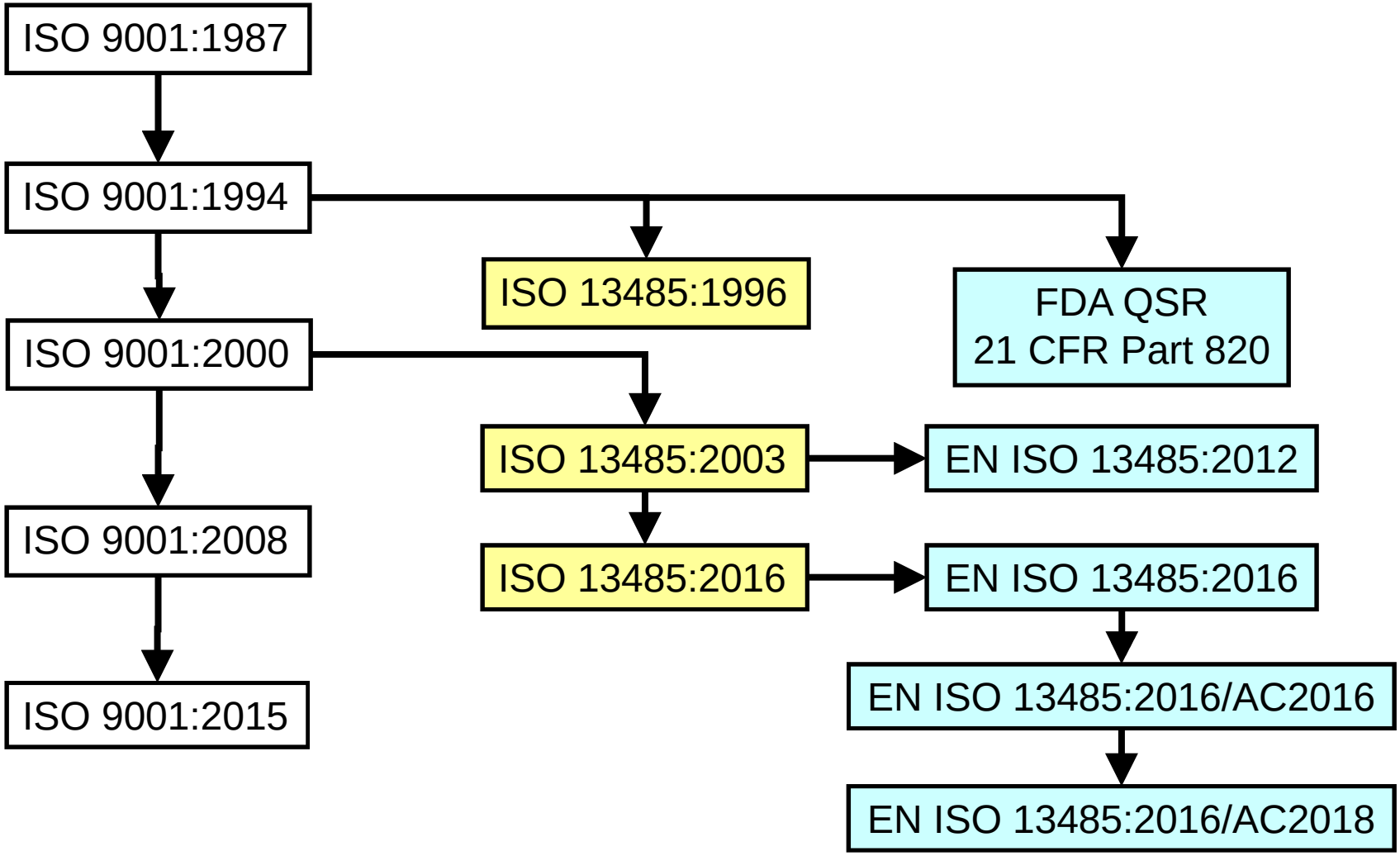

RMS Standards

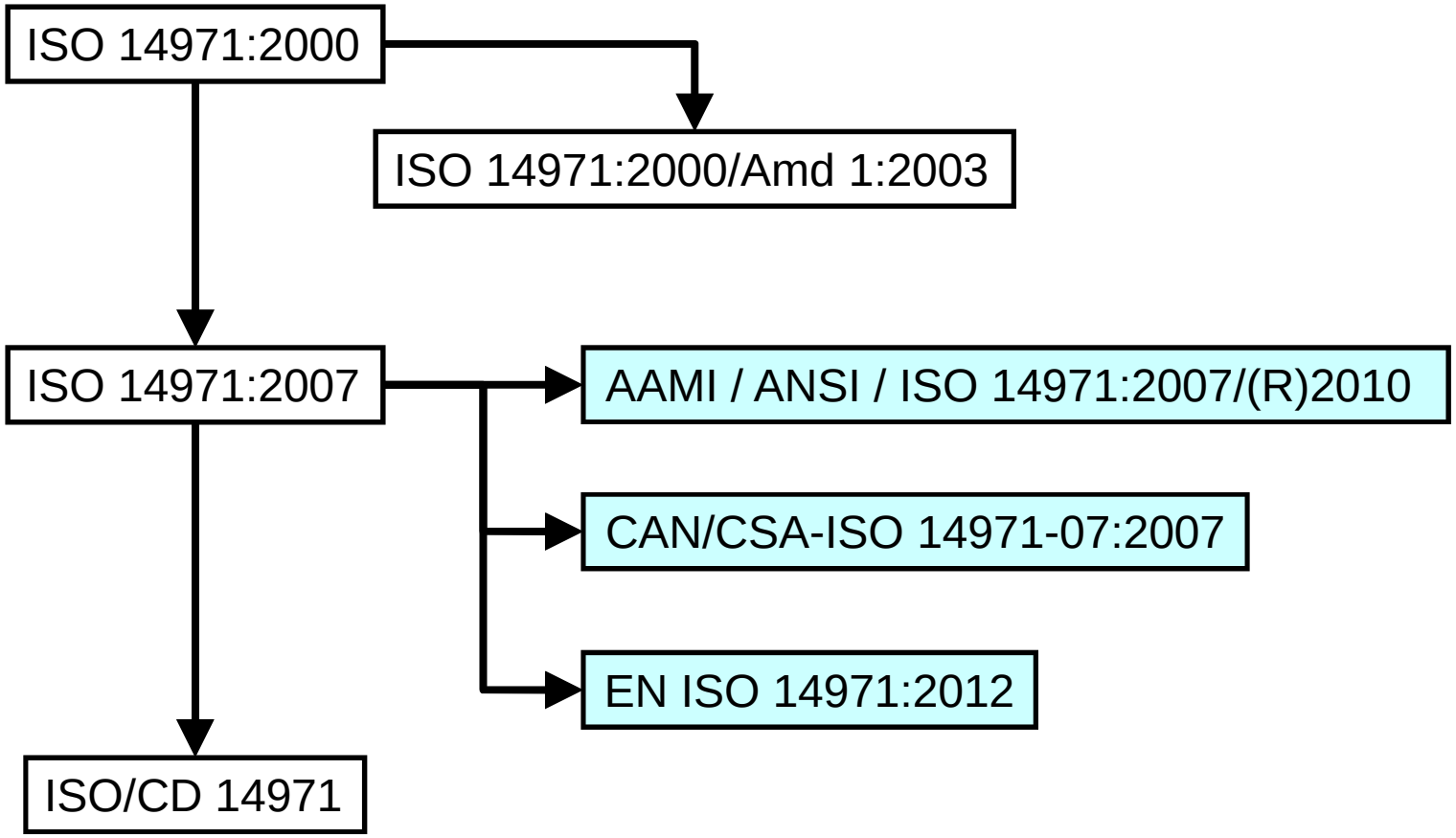

The Risk Management Flow

Three Step Process

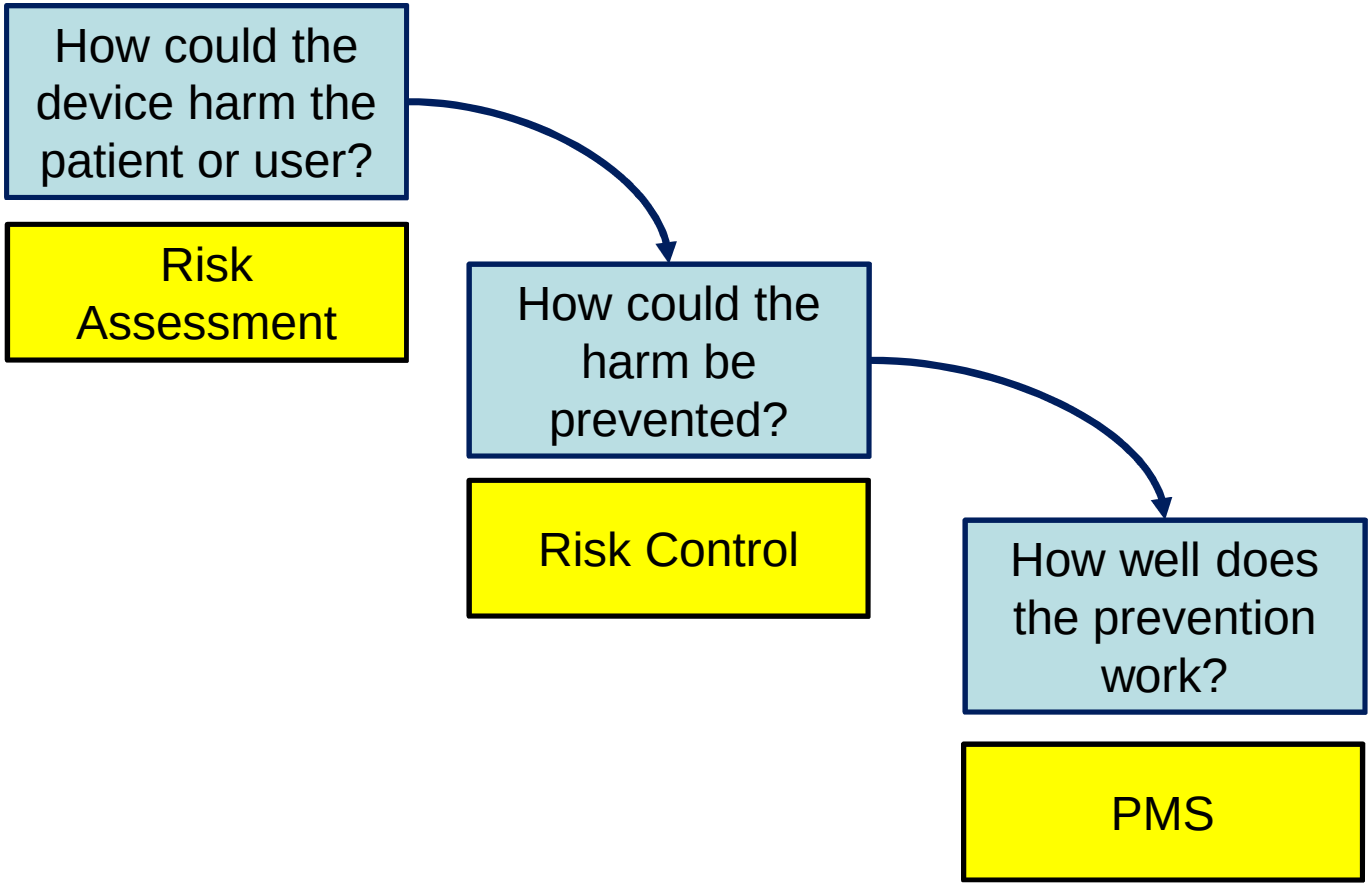

Overview of the Standard

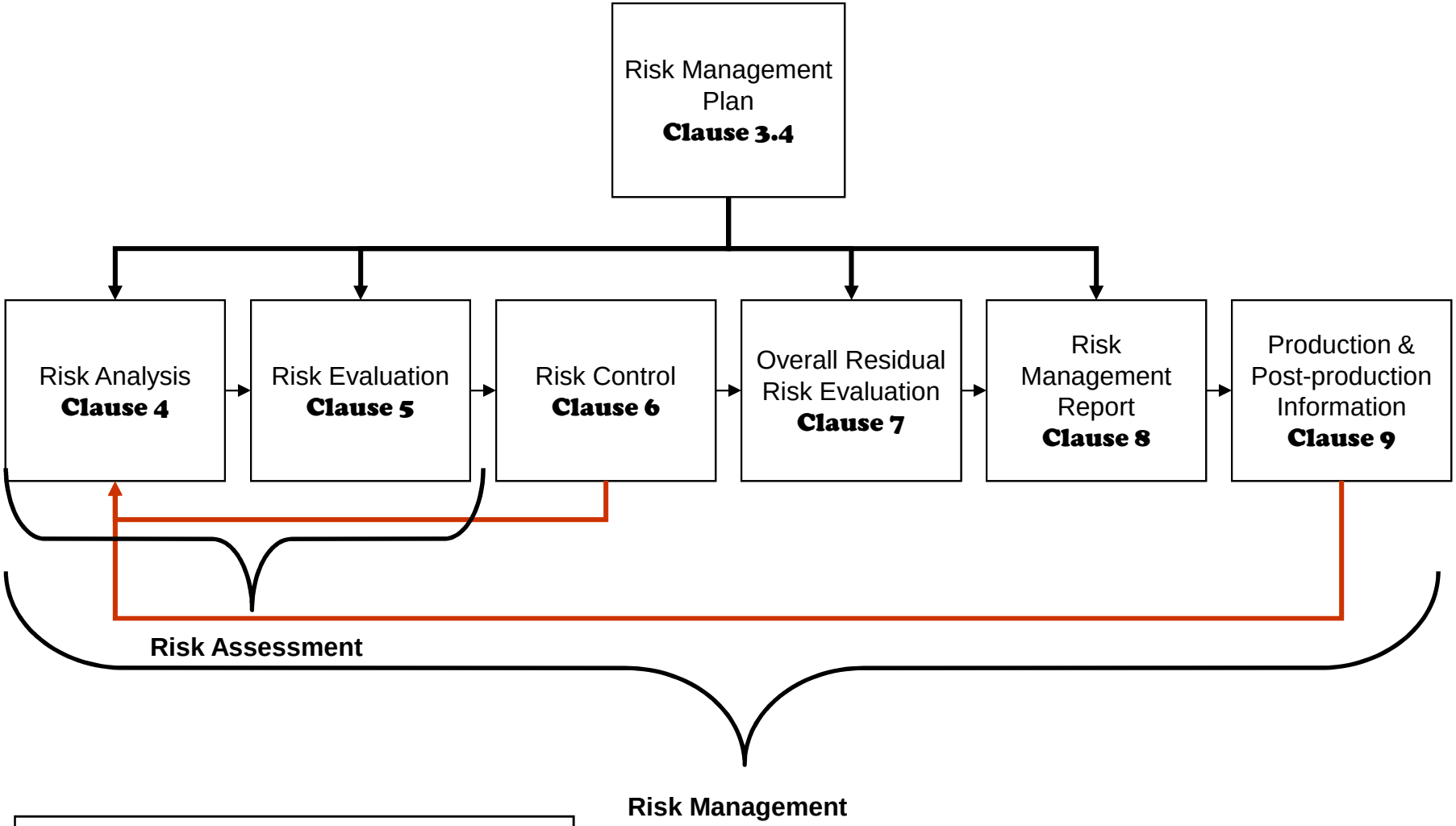

Adapted from ISO 14971:2007 Figure 1

Hazard Evaluation Steps

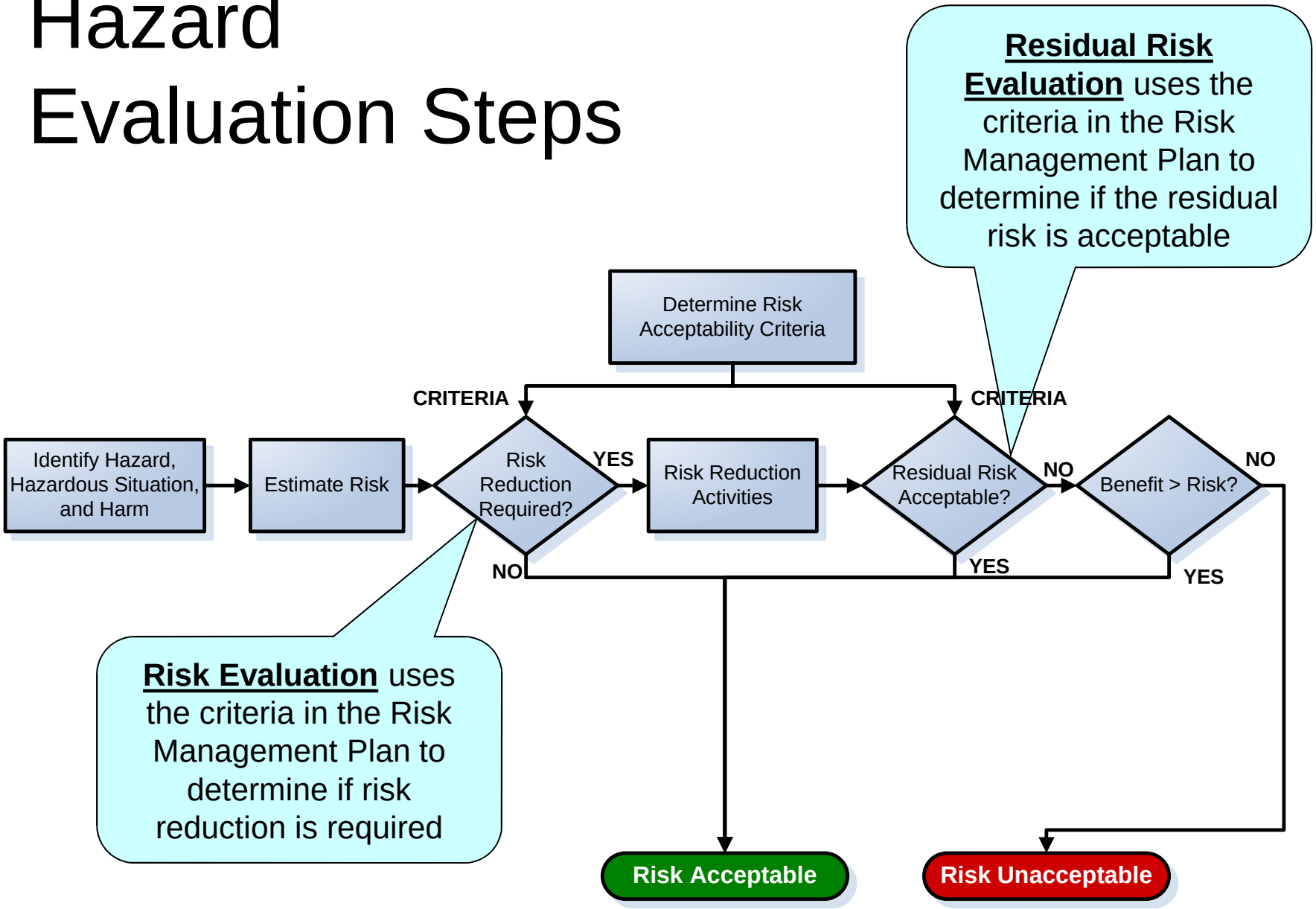

Hazard, Hazardous Situation, & Harm

Hazard & Harm

Hazard means a potential source of harm

The Sequence of Events and the Hazardous Situation mediate the relationship

Harm means physical injury or damage to the health of people, or damage to property or the environment

Hazardous Situation

Sequence of events means the steps that creates a hazardous situation

Hazardous Situation means the circumstance in which people, property, or the environment are exposed to one or more hazards

The Components of Risk

Hazards, set off by a sequence of events, create Harm.
Severity & Probability combine to measure Risk.

P_1 is the probability of a hazardous situation occurring
P_2 is the probability of a hazardous situation leading to harm

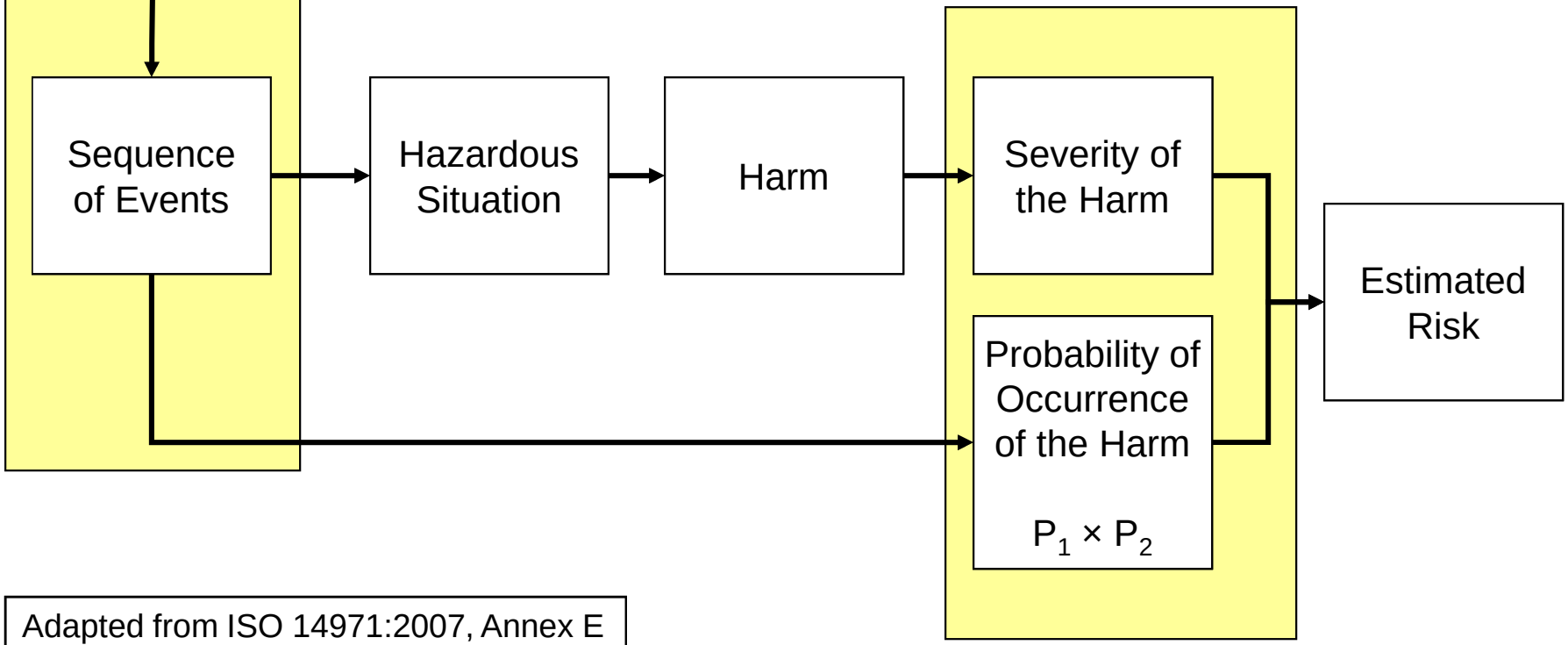

Adapted from ISO 14971:2007, Annex E

Understanding Frequency and Severity

Risk

- Risk means the combination of the severity of the harm and its frequency of occurrence.

- In ISO 14971:2007 the definition of risk is “combination of the probability of occurrence of harm and the severity of that harm”
  - There are technical reasons why probability is not the right word.

- In Risk Analysis, determine the harm, its severity, and how often it happens.

Severity

- Most harms have severity levels. A common example is a burn.
- First-degree burns affect the outer layer of the skin only. The burn site is red, painful, dry, and without blisters.
- Second-degree burns involve the outer layer of the skin and part of the next layer. The burn site appears red, blistered, and may be swollen and painful.
- Third-degree burns destroy layers of the skin. The burn site may appear white or charred.

Severity Table

Severity Levels	
Term	Description
Catastrophic	Results in death
Critical	Results in permanent impairment to life-threatening injury
Serious	Results in injury or impairment requiring medical intervention
Minor	Results in injury or impairment not requiring medical intervention
Negligible	Inconvenience or temporary discomfort

Based on Table D.3 – Example of five qualitative severity levels

The manufacturer chooses the severity levels based on clearly defined conditions of use.

Frequency

- Frequency is a measure of how often the harm occurs with the specified severity.

- Frequency of occurrence is a rate, meaning it has a numerator and a denominator.
  - Consider a single use device that causes a particular harm/severity 3 times in every 1,000 uses.
  - This is the rate of occurrence and may be expressed in a variety of ways:
    - 3/1000
    - 0.003 3.0×10^{-3}
    - 0.3% 3,000 ppm

Frequency Scales

- The definitions for frequency can be different for different product families. For example, a manufacturer can choose to use one set of definitions for X-ray machines, but can have a different set of definitions for sterile disposable dressings.

- Different measures of frequency may be appropriate, depending upon the application.

- Frequency scales can include “frequency of harm per use”, “frequency of harm per device”, “frequency of harm per hour of use”, *etc*.

- Specify the frequency scale in the Risk Management Plan and ensure all team members understand it.

Frequency Table

Frequency Levels	
Term	Description
Frequent	Happens often
Probable	Likely to happen
Occasional	Can happen, but not likely
Remote	Unlikely to happen
Improbable	Highly unlikely to happen

Frequency Levels	
Term	Frequency Range
Frequent	$\geq 10^{-3}$
Probable	$< 10^{-3}$ and $\geq 10^{-4}$
Occasional	$< 10^{-4}$ and $\geq 10^{-5}$
Remote	$< 10^{-5}$ and $\geq 10^{-6}$
Improbable	$< 10^{-6}$

Estimating Risk and Residual Risk

Definitions

- *Risk* means the combination of the severity of the harm and its frequency of occurrence.

- *Residual Risk* means the risk remaining after risk control measures have been taken

- Often there is an estimate of the initial risk, *i.e.,* before risk control and an estimate of the residual risk, *i.e.,* after risk control

- They usually use the same method
  - The idea starts with a risk plain
  - It usually becomes a risk matrix

The Risk Plain

The concept of risk starts with continuous Probability and Severity defining region

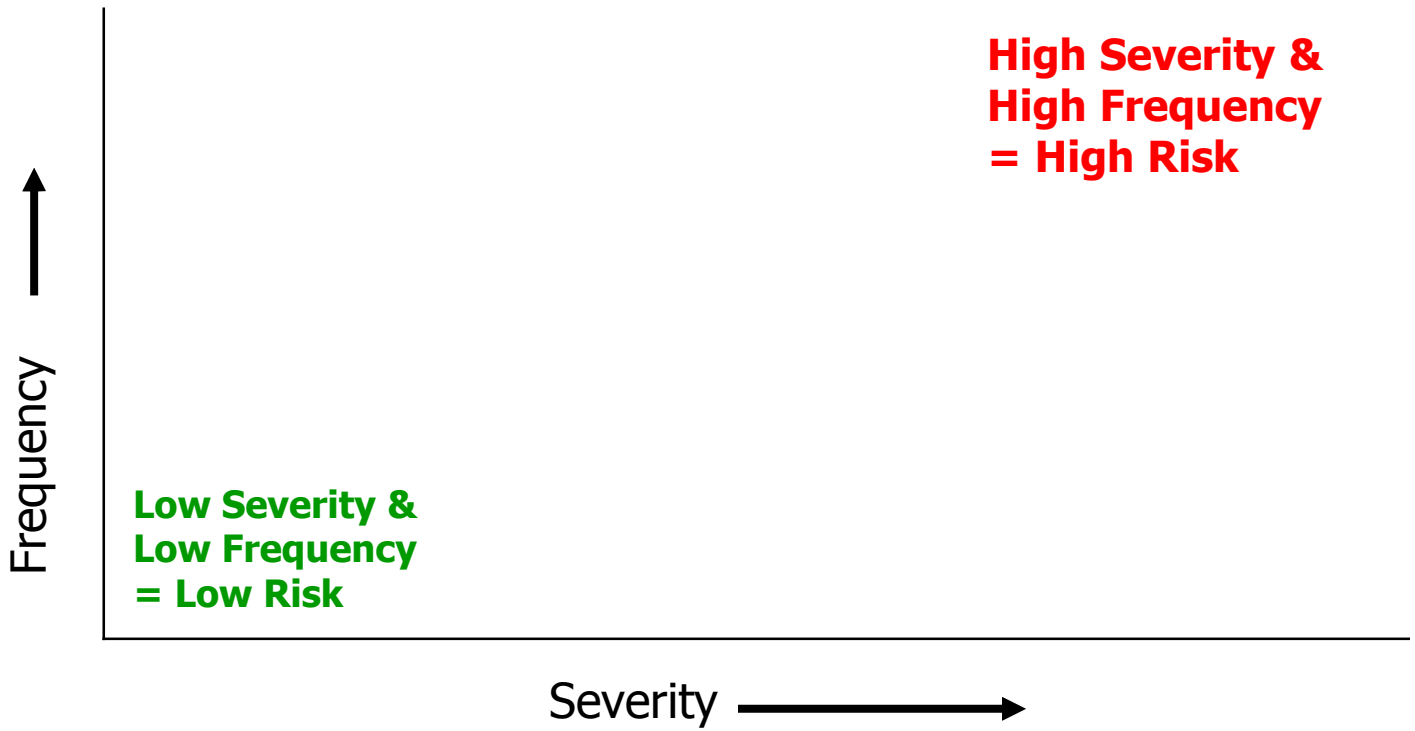

A Risk Matrix

		Severity Levels				
		Negligible	Minor	Serious	Critical	Catastrophic
Frequency Levels	Frequent					
	Probable					
	Occasional					
	Remote					
	Improbable					

The risk estimate depends on the cell in the table.

Some companies use numbers for the headings and assign numerical values to the cells. The assignment could be the product, the sum, or some other method.

Setting Acceptability Criteria

Acceptability Regions

The concept of risk starts with continuous Probability and Severity defining the region

It is then divided by the acceptability criteria

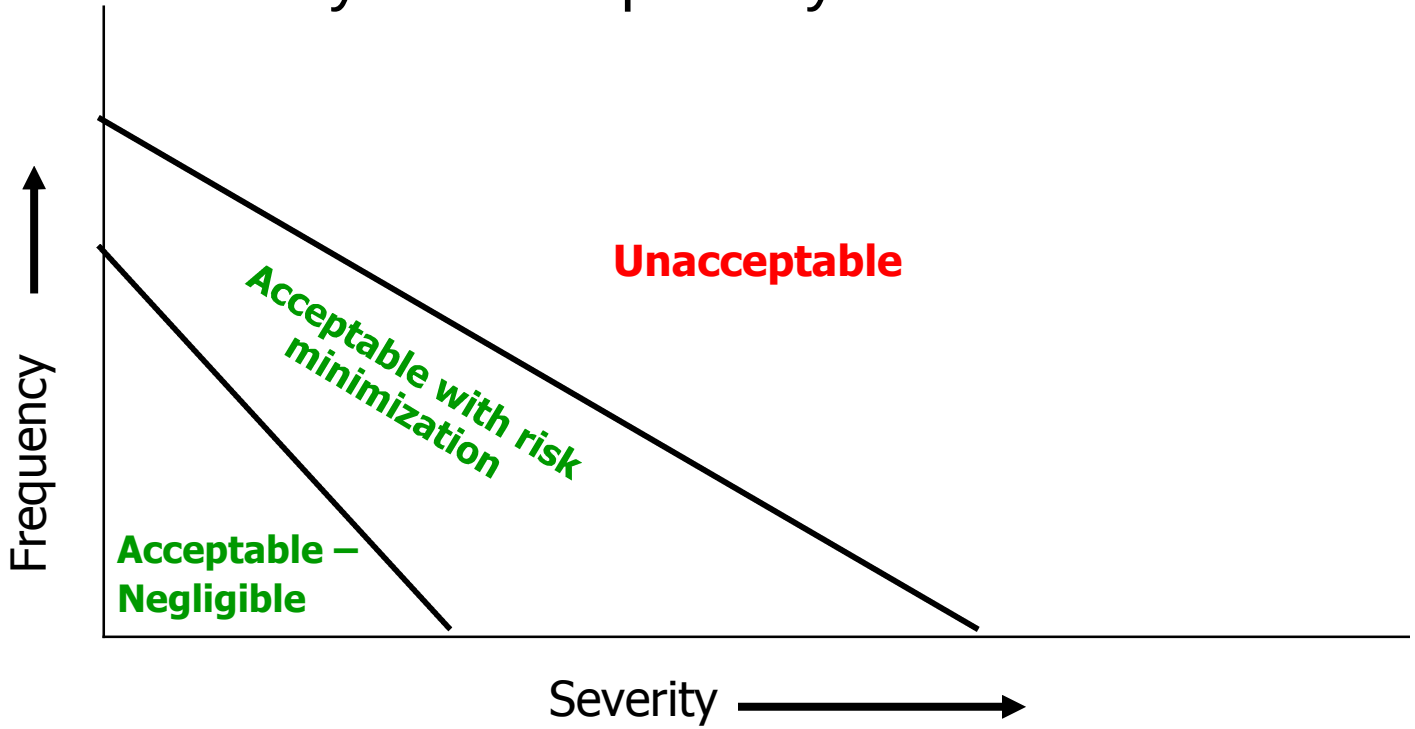

Creating a Risk Matrix

		Severity Levels				
		Negligible	Minor	Serious	Critical	Catastrophic
Frequency	Frequent	R2	R2	R3	R3	R3
	Probable	R2	R2	R2	R2	R3
	Occasional	R2	R2	R2	R2	R3
	Remote	R1	R1	R2	R2	R3
	Improbable	R1	R1	R2	R2	R3

R1 Acceptable – Negligible
R2 Acceptable with Risk Minimization
R3 Unacceptable

Each company must develop its own risk acceptability criteria.

The company's risk management policy and product type will determine the boundary between the regions.

Other Acceptability Criteria

- The Risk Matrix showing the acceptability regions is a very common.
- There must also be acceptability criteria for overall residual risk
- In addition, there are some special cases:
  - Risks where the frequency of occurrence cannot be estimated
  - Implementation of a product safety standard
  - Implementation of a toxicology standard such as ISO 10993-1:2009
  - Implementation of a usability standard such as IEC 62366-1:2015
  - Implementation of a software process standard such as IEC 62304:2006

Production and Post-production Information

Information Collection

- Establish, document, and maintain a system to collect and review information about the medical device or similar devices in the production phase and the post-production phase
  - Collect and review information generated by internal quality auditors, production operators, installers, users, and maintainers of the medical device
  - Collect and review publicly available information about similar medical devices on the market
  - Identify new and revised standards

Information Evaluation

- Evaluate the information for relevance to safety, including:
  - Previously unrecognized hazards
  - Previously unrecognized hazardous situations
  - The estimated residual risk is no longer acceptable

- If there is one of these situations relevant to safety:
  - Evaluate the impact on the previous risk management activities
  - Evaluate the opportunity to improve the risk management process
  - Review and evaluate the Hazard Analysis for any effect on risk control measures, the residual risk, and its acceptability.

- Record the review and evaluation in the risk management file

ISO 14971:2007

- ISO 14971:2007 includes a process to collect and evaluate post-production information
- The standard has steps that fit nicely with the feedback steps; the two should be integrated
  - Monitoring and measurement, ISO 13485:2016, 8.2, becomes an input to risk management

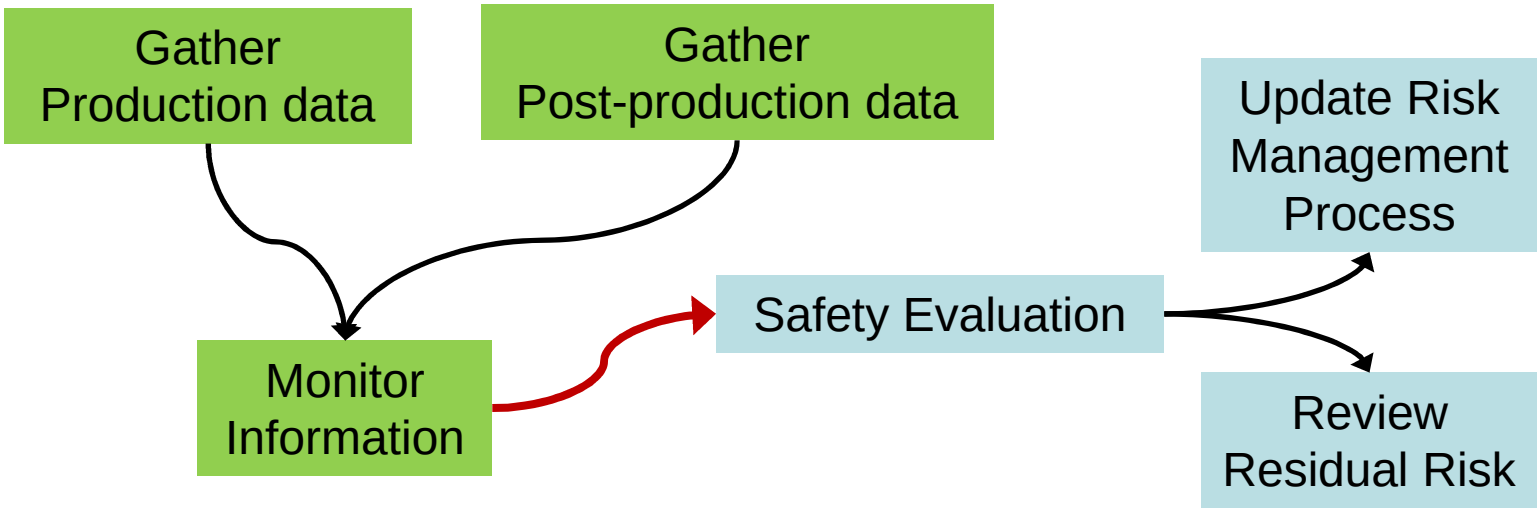

Linkage to the QMS

- The QMS requirements include data collection and analysis, so utilize it for the RMS
  - Review and implement the methods in GHTF/SG3/N18:2010 *Quality Management System – Medical Devices – Guidance On Corrective Action And Preventive Action And Related QMS Processes*

- For FDA/QSR use the requirements from 21 CFR 820.100(a)(1) for analysis using appropriate statistical methodology

- For ISO 13485:2016 use the methods from:
  - 8.2.1 Feedback
  - 8.2.2 Complaint handling
  - 8.2.4 Internal audit
  - 8.2.5 Monitoring and measurement of processes
  - 8.2.6 Monitoring and measurement of product

Production Information

- Pay particular attention to:
  - Data collected from validated processes
  - Nonconforming product dispositions of rework, repair, or concession
  - Internal quality audits of production processes
- Train Device History Record (DHR) reviewers to look for issues that might affect safety
- Review internal audits for potential problems related to device safety

Post-Production Information

- Pay particular attention to:
  - Customer complaints
  - Installation reports
  - Servicing reports
  - FDA’s TPLC Information
  - EU Field Safety Notices
  - Reports from Health Canada
  - Professional literature

TPLC Search Engine

http://www.accessdata.fda.gov/scripts/cdrh/cfdocs/cfTPLC/tplc.cfm

Field Safety Notices (FSNs) – EU

- A Field Safety Notice (FSN) is a communication sent by medical device manufacturers, or their representatives, in connection with a Field Safety Corrective Action (FSCA).

- Republic of Ireland
  - http://www.hpra.ie/homepage/medical-devices

- United Kingdom
  - https://www.gov.uk/drug-device-alerts?keywords=&alert_type%5B%5D=field-safety-notices&issued_date%5Bfrom%5D=&issued_date%5Bto%5D=

Health Canada

- Health Canada provides 3 types of risk communications products:
  - Public Advisories
  - Information Updates
  - Foreign Product Alerts

- Advisories, Warnings, and Recalls
  - http://www.hc-sc.gc.ca/ahc-asc/media/advisories-avis/index-eng.php

Updating the Hazard Analysis

Hazard Analysis

- Recall the key elements of the hazard analysis once the device is placed on the market:
  - The harm to the patient or user
  - The risk reduction measures in place as a result of the harm
  - The estimate the severity of the harm after risk reduction
  - The estimate of the frequency of occurrence of the harm after risk reduction

- Information evaluation helps determine if any of these have changed

Detecting the Change

- Think of this as a two-step process
- In the first step, there is an indication the severity or the frequency in practice does not match the estimates in the hazard analysis
  - Patients are harmed with an unanticipated severity
  - Patients are harmed, with a specific severity, more often than anticipated
- The signal often comes because the post-production analysis shows that the estimated risk in practice is “worse” than the estimated residual risk
- The signal suggests that the risk reduction measures are not as effective as anticipated

Addressing the Change

- If the signal suggests that the risk reduction are not as effective as anticipated, then an investigation is warranted

- Address the following issues:
  - Is the risk reduction measure implemented in the design as anticipated
    - Review the implementation verification
    - Review the effectiveness verification
  - Is the risk reduction measure implemented in production as anticipated
    - Review the design transfer
    - Review the Device Master Record
    - Review Device History Records
    - Review process validation records
    - Review nonconforming product disposition records

Updating the Risk Management Process

Risk Management Process

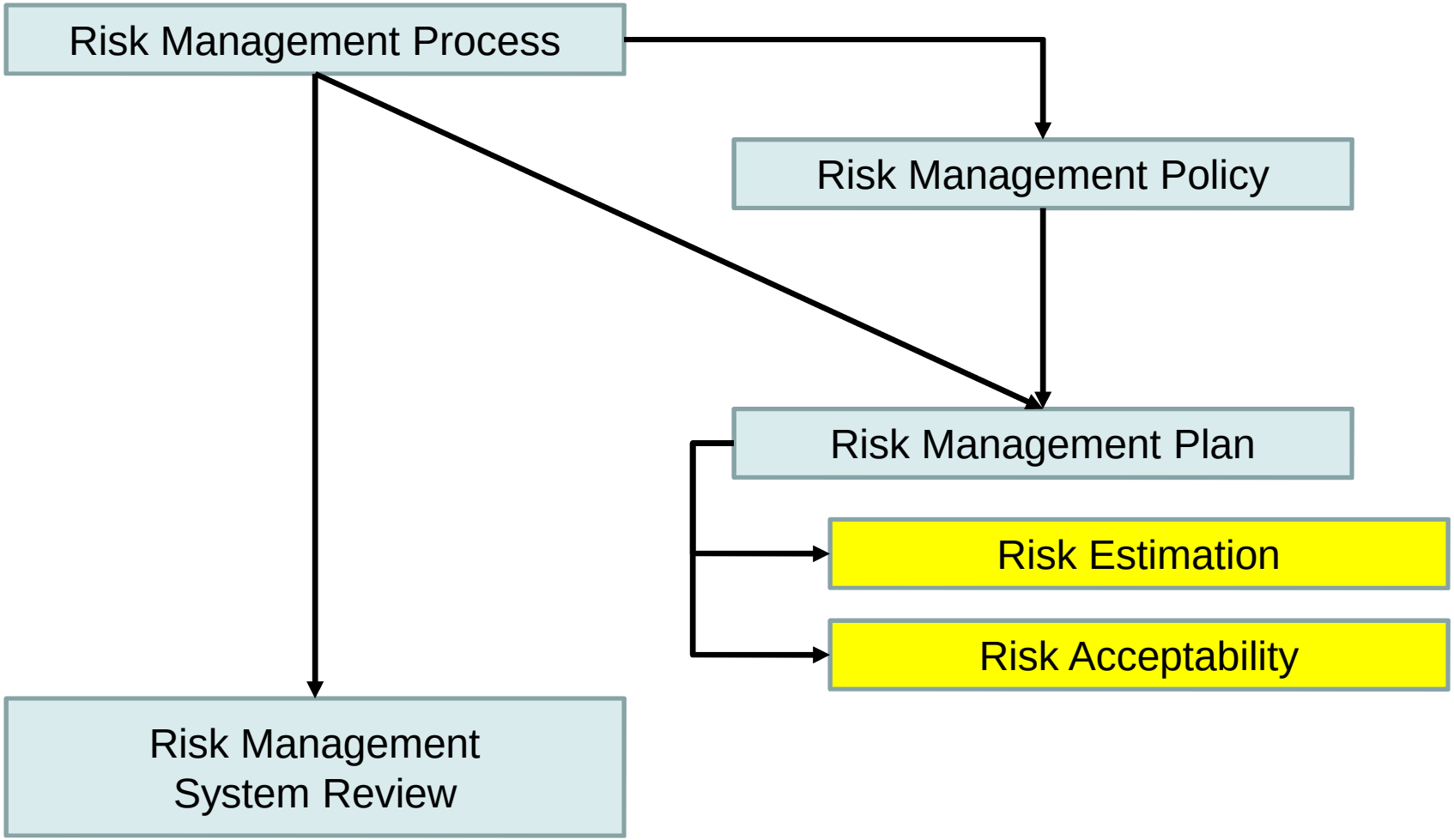

Evaluation

- Does the need to update the risk management file (risk control, harm severity, or harm frequency) suggest a weakness in the risk management process?

- Address the following issues:
  - Is the SOP that implements the risk management process correct
  - Is the risk management process SOP implemented correctly
  - Is the risk management policy adequate
  - Did the risk management system review fail to identify any issues
  - Did the risk management plan correctly implement the risk management process SOP and the risk management policy

QUESTIONS