Quality Management

Dan O'Leary CBA, CQA, CQE, CRE, SSBB, CIRM
President
Ombu Enterprises, LLC
Dan@OmbuEnterprises.com
www.OmbuEnterprises.com

OMBU
ENTERPRISES, LLC

FDANEWS

©2018, Ombu Enterprises, LLC

Topics

- QSR
- ISO 13485:2016
- The EU-MDD Variant
- The EU-MDR Variant
- Questions

Framework

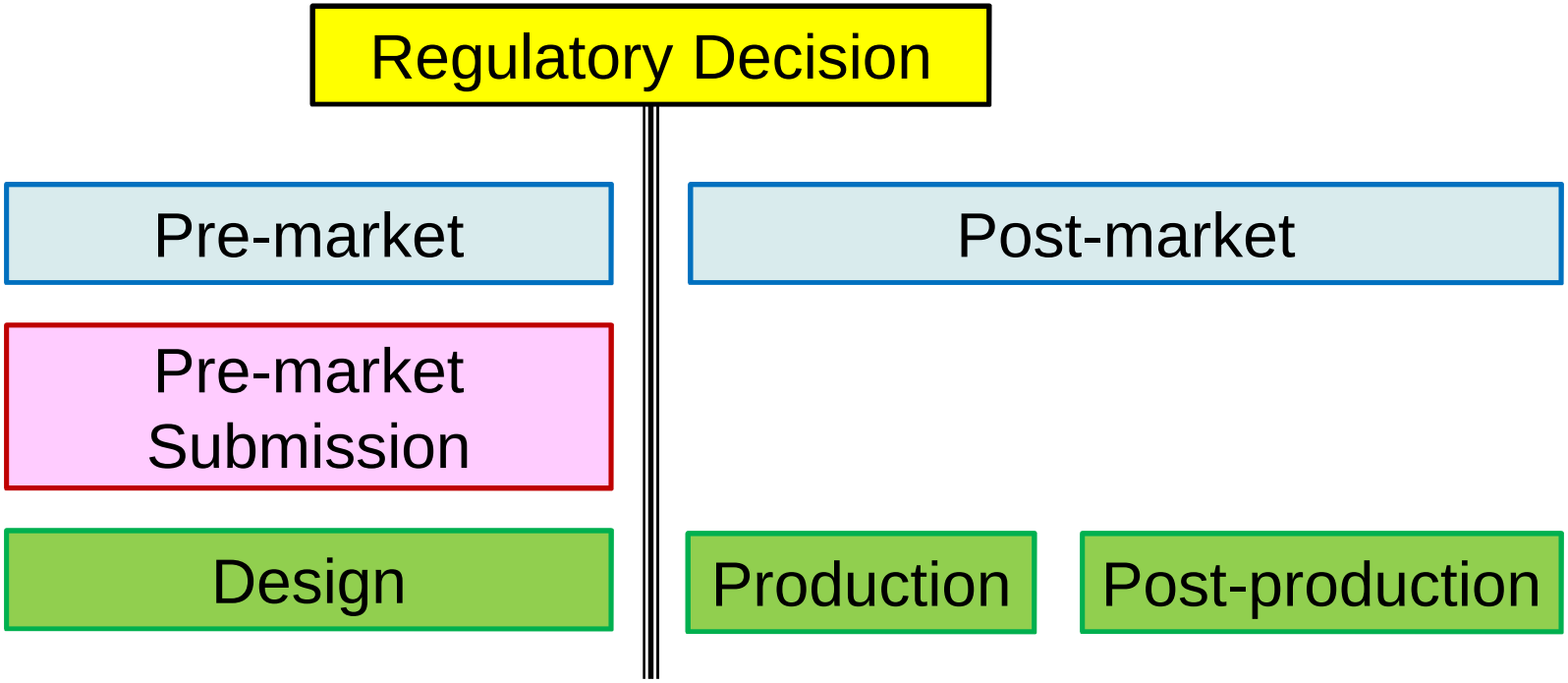

ISO 14971:2007, 2.11 defines post-production as the part of the life-cycle of the product after the design has been completed and the medical device has been manufactured
EXAMPLES: transportation, storage, installation, product use, maintenance, repair, product changes, decommissioning, and disposal

QSR

Process Flow

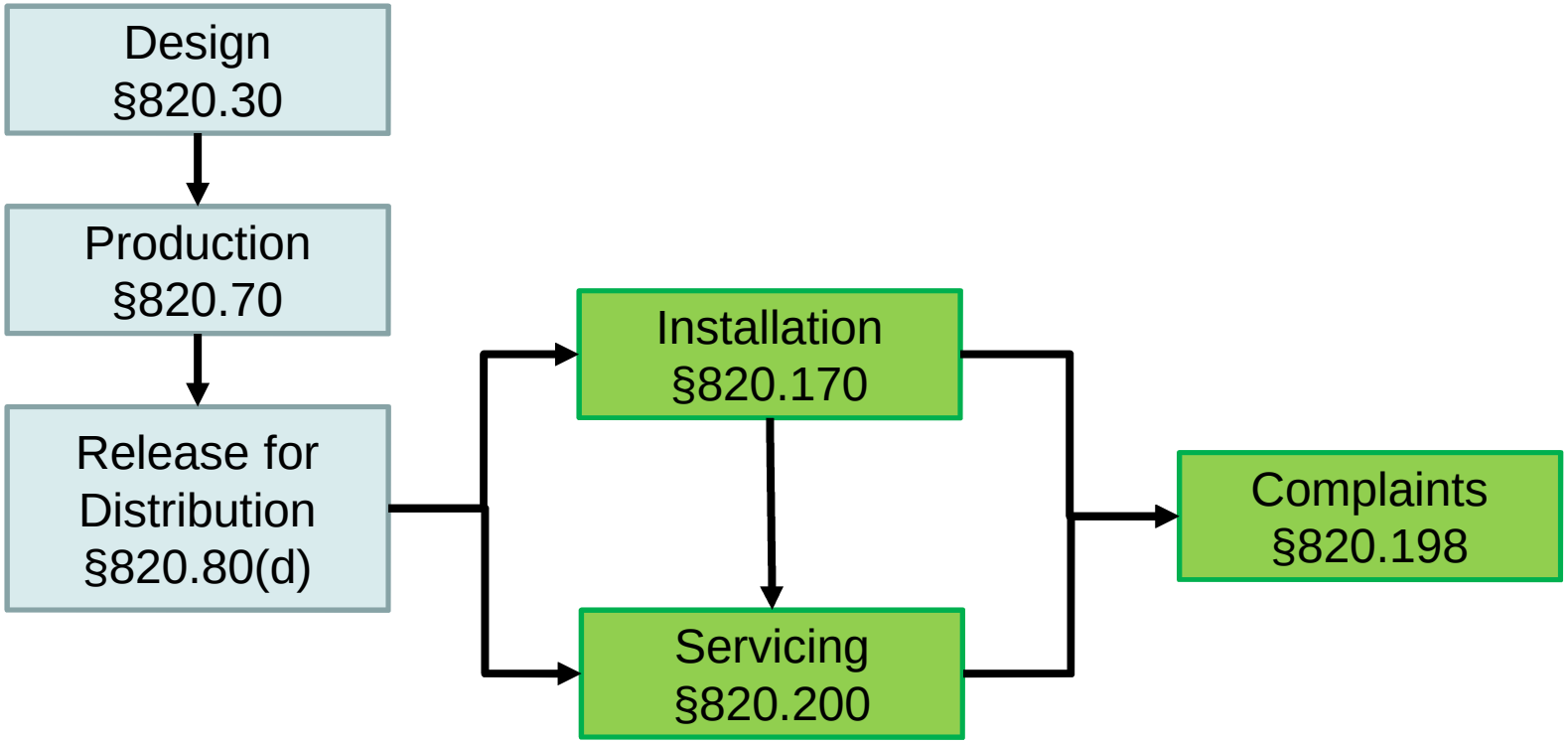

High–Level Expectation

- The manufacturer ships only devices that are safe and effective
  - There are effective processes that provide the assurance
- They are designed correctly
- They are manufactured correctly
  - The manufacturer maintains the Device Master Record
- They are checked before release for distribution
  - Final acceptance tests and inspections
  - Data and documentation review (Device History Record)
  - Authorized by a designated individual

Complaints

- Complaints allow the manufacturer to determine the effectiveness of the processes

- Complaints provide two kinds of information
  - Specific complaints focus on a particular issue
  - Complaint analysis provides a broader view of performance

- Complaints provide an opportunity to improve the product and processes

MDRs

- Complaints may lead to MDRs (Part 803)
- When a complaint meets the reporting criteria, then inform FDA
- FDA's analysis can help detect issues across the industry and the device types
- Manufacturers have access to the individual reports using the TPLC data

Corrections & Removals

- Complaints may lead to C&R (Part 806)
- A C&R report may lead FDA to classify it as a recall (Part 7)
- FDA's analysis can help detect issues across the industry and the device types
- Manufacturers have access to the individual recall reports using the TPLC data

TPLC Database

- The Total Product Life Cycle (TPLC) database integrates premarket and post-market data about medical devices. It includes information pulled from CDRH databases including Premarket Approvals (PMA), Premarket Notifications (510[k]), Adverse Events, and Recalls. The TPLC database is refreshed as each of the individual data sources is updated.

- You can search the TPLC database by device name or Pro-Code to receive a full report about a particular product line.

- In its current form, the TPLC database provides data by Pro-Code or generic category of device, and not by individual submission or brand name.

TPLC Database

- Determine the FDA product code (Pro-Code) for the device and enter it into the search engine
- Select the starting year for the report
- The report has three sections:
  - Premarket Reviews
  - Device Problems (sorted in descending order)
  - Recalls – A table showing the number of recalls by class and year
  - Recalls – A table showing the manufacturer and class
  - Each section includes hyperlinks to the other databases for more detailed information

TPLC Search Engine

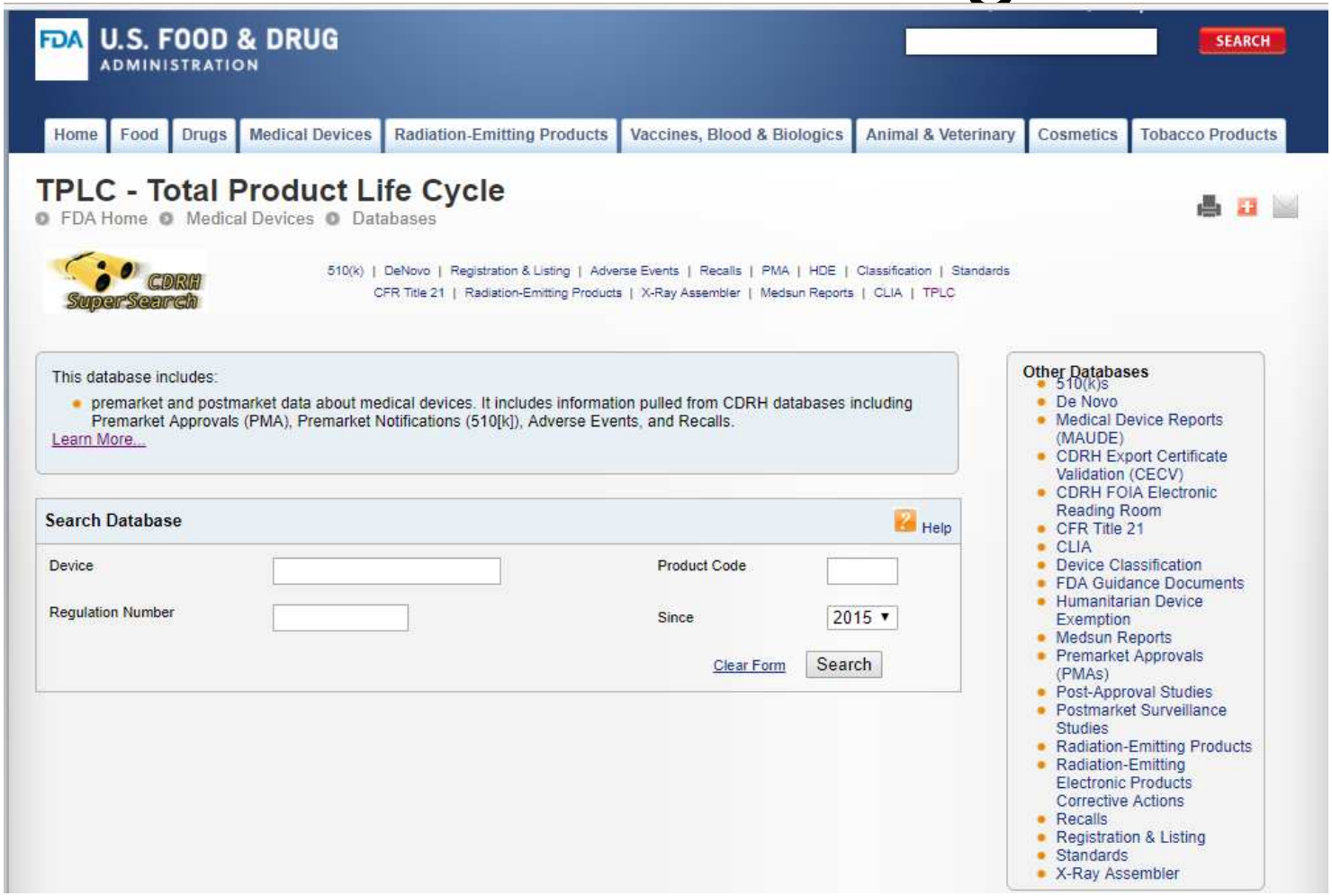

http://www.accessdata.fda.gov/scripts/cdrh/cfdocs/cfTPLC/tplc.cfm

ISO 13485:2016

Summary

- *Post-market Surveillance* means a systematic process to collect and analyze experience gained from medical devices that have been placed on the market [3.14]
- The feedback process includes gathering data from production and post-production activities [8.2.1]
- The complaint handling process manages complaints through evaluation, investigation, and corrective action. [8.2.2]
- When nonconforming product is detected after delivery, take on the effects of the nonconformity [8.3.3]
- Post-market surveillance contributes to improving the QMS, device safety, and device performance [8.5.1]

8.2.1 Feedback

- Documented procedures provide the methods to gather information from production activities and from post-production activities
- The information gathered is an input to data analysis in 8.4
- The information is also an input to the ISO 14971:2007 risk management process, especially Clause 9 on production and post-production information collection

8.2.2 Complaints

- Documented procedures provide the methods to receive, record, investigate, and take corrective action on complaints
  - The standard has a definition of a complaint
- The information gathered is an input to data analysis in 8.4
- The information is also an input to the ISO 14971:2007 risk management process, especially Clause 9 on production and post-production information collection
- Note that all complaints are feedback

8.3.3 Nonconforming Product

- Document procedures define the controls, responsibility, and authority for handling nonconforming product
- There is a special case for nonconforming product detected after delivery
- Determine the effects (actual and potential) of the nonconforming product and take action
- One action is issuing an advisory notice, which must be covered by a procedure
  - An advisory notice provides information or describes an action to take for a device that has already shipped

8.5.1 Improvement – General

- Identify needed changes for QMS effectiveness, device safety, and device performance using post-market surveillance, data analysis, corrective action, preventive action, *etc*.

- Implement the identified changes

The EU-MDD Variant

EN ISO 13485:2016

- This standard is harmonized to the Medical Device Directive, MDD

- There is a correction document also harmonized, EN ISO 13485:2016/AC:2016
  - For Annex ZB it corrects some of the cross references in the tables related the conformity assessment paths.
- There is a correction document that is not yet harmonized EN ISO 13485:2016/AC:2018
  - While published, I have not yet obtained a copy

- Table ZB.1 provides additional information about meeting the requirements of the MDD, Annex II using the sections from ISO 13485:2016

The EU-MDR Variant

CEN/TR 17223:2018

- The Technical Report provides guidance on the relationship between EN ISO 13485:2016 and the requirements in the EU-MDR and the EU-IVDR

- It focuses on the general obligations of the manufacturer (Article 10) and the conformity assessment requirements (Annexes IX and XI)

- Table 1 shows the relationship between the clauses of EN ISO 13485 and the requirements of the EU-MDR together with commentary on the extent to which the requirements of the standard cover the specific details in the Regulation

References

- The changes described on the following slides refer to specific Articles and Annexes of the MDR
- Article 10 Obligations of the Manufacturer
- Annex I General Safety and Performance Requirements
- Annex IX Conformity Assessment Based on a Quality Management System and Assessment of the Technical Documentation

Risk Management

- Article 10 has two references to risk management
- Section 2 says to set up a risk management system following Annex I, Article 3
- Section 9(e) says that the QMS addresses the risk management system following Annex I, Article 3

Risk Management

- Article 10(2)
- Manufacturers establish, document, implement, and maintain a system for risk management as described in Annex I, Section 3
- Annex I, Chapter I, 3
- Establish, implement, document, and maintain a risk management system.
  - Partially covered by 7.1
- Risk management is a continuous iterative lifecycle process of a device requiring regular systematic updating.
  - Partially covered by 4.1.2 & 7.1
- Establish and document a risk management plan for each device; identify and analyze the known and foreseeable hazards associated with each device; estimate and evaluate the risks associated with, and occurring during, the intended use and during reasonably foreseeable misuse; eliminate or control the risks
  - Not covered

Risk Management (Cont.)

- Article 10(2)
- Manufacturers establish, document, implement, and maintain a system for risk management as described in Annex I, Section 3

- Annex I, Chapter I, 3
- Evaluate the impact of information from the production phase and, in particular, from the post-market surveillance system, on hazards and the frequency of occurrence thereof, on estimates of their associated risks, as well as on the overall risk, benefit-risk ratio, and risk acceptability
  - Partially covered by 8.2.1 & 7.3.9
- Based on the evaluation of the impact of the information, if necessary amend the control measures
  - Not covered

Risk Management

- Article 10(9)(e)
- The quality management system addresses risk management as set out in in Annex 1, Section 3

- Annex IX, Section 2.2, Paragraph 2(c), Indent 3
- The application to the Notified Body includes the procedures and techniques for monitoring, verifying, validating, and controlling the design of the devices and specifically covers risk management as referred to in Annex I, Section 3
  - Partially covered by 4.1.2 & 7.1

Clinical Evaluation

- Article 10 has two references to clinical evaluation
- Section 10 says to implement and keep up to date the post-market surveillance system in accordance with Article 83
- Section 9(i) says that the QMS addresses setting-up, implementation, and maintenance of a post-market surveillance system, in accordance with Article 83

Clinical Evaluation

- Article 10(3)
- Manufacturers conduct a clinical evaluation in accordance with the requirements set out in Article 61 and Annex XIV, including a PMCF

- Partially covered by 7.3.7
- EN ISO 13485 requires clinical evaluation in accordance with applicable regulatory requirements. The details contained in Article 61 or Annex XIV are not provided explicitly.

Clinical Evaluation

- Article 10(9)(f)
- The quality management system addresses clinical evaluation in accordance with Article 61 and Annex XIV, including PMCF

- Annex IX, Section 2.2, Paragraph 2(c), Indent 4
- The application to the Notified Body includes the procedures and techniques for monitoring, verifying, validating, and controlling the design of the devices and specifically covers the clinical evaluation, pursuant to Article 61 and Annex XIV, including post-market clinical follow-up
  - Partially covered by 7.3.7

Post-Market Surveillance

- Article 10 has two references to post-market surveillance
- Section 3 says to conduct a clinical evaluation, including post-market clinical follow-up, PMCF, following Article 61 and Annex XIV
- Section 9(f) says that the QMS addresses clinical evaluation, including PMCF, in accordance with Article 61 and Annex XIV

Post-Market Surveillance

- Article 10(10)
- Manufacturers implement and keep up to date the post-market surveillance system in accordance with Article 83.

- Partially covered by 8.2.1 & 8.5.1
- EN ISO 13485 requires a system of post market surveillance in accordance with regulatory requirements within the quality management system. The detail in Article 83 is not covered explicitly.

Post-Market Surveillance

- Article 10(9)(i)
- The quality management system addresses setting-up, implementation, and maintenance of a post-market surveillance system, in accordance with Article 83

- Partially covered by 8.2.1 & 8.5.1
  - EN ISO 13485 requires a system of post market surveillance within the quality management system. The detail in Article 83 is not specified explicitly.

QUESTIONS